Data Sheet | Item Number: 2201-1201

2-conductor through terminal block; with push-button; 1.5 mm²; with test port; side and center marking; for DIN-rail 35 x 15 and 35 x 7.5; Push-in CAGE CLAMP®; 1,50 mm²; gray

https://www.wago.com/2201-1201

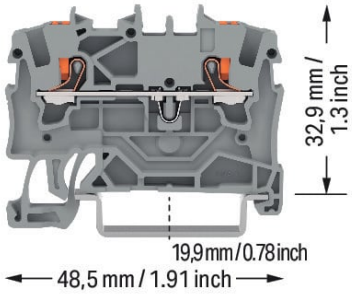

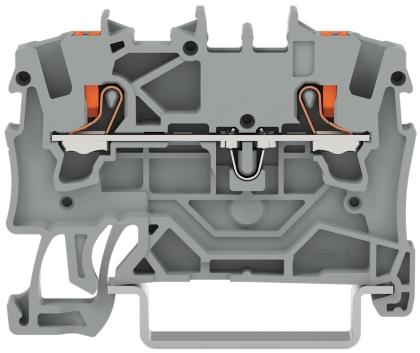

Color: gray

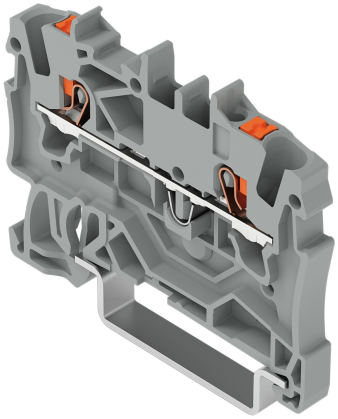

Similar to illustration

Electrical data

Ratings per	IEC/EN 60947-7-1		
Overvoltage category	III	III	II
Pollution degree	3	2	2
Nominal voltage	800 V	-	-
Rated surge voltage	8 kV	-	-
Rated current	17.5 A	-	-
Current at conductor cross-section (max.) mm²	24 A	-	-

Approvals per	UL 1059		
Use group	B	C	D
Rated voltage	600 V	600 V	-
Rated current	15 A	15 A	-

Approvals per	CSA 22.2 No 158		
Use group	B	C	D
Rated voltage	600 V	600 V	-
Rated current	15 A	15 A	-

Ex information	
Reference hazardous areas	See “Downloads – Documentation – Additional Information: Technical Section; Technical Explications”
Ratings per	ATEX: PTB 18 ATEX 1004 U / IECEx: PTB 18.0011U (Ex eb IIC Gb)
Rated voltage EN (Ex e II)	550 V
Rated current (Ex e II)	17.5 A

 Continued on next page

Power Loss

Power loss, per pole (potential)	0.7711 W
Rated current I_N for specified power loss	18 A
Resistance value for specified, current-dependent power loss	0.00238 Ω

Connection data

Connection points	2
Total number of potentials	1
Number of levels	1
Number of jumper slots	2

Connection 1

Connection technology	Push-in CAGE CLAMP®
Actuation type	Push-button
Connectable conductor materials	Copper
Nominal cross-section	1.5 mm²
Solid conductor	0.25 … 2.5 mm² / 22 … 14 AWG
Solid conductor; push-in termination	0.75 … 2.5 mm² / 18 … 14 AWG
Fine-stranded conductor	0.25 … 2.5 mm² / 22 … 14 AWG
Fine-stranded conductor; with insulated ferrule	0.25 … 1.5 mm² / 22 … 16 AWG
Fine-stranded conductor; with ferrule; push-in termination	0.75 … 1.5 mm² / 18 … 16 AWG
Note (conductor cross-section)	Depending on the conductor characteristic, a conductor with a smaller cross-section can also be inserted via push-in termination.
Strip length	9 … 11 mm / 0.35 … 0.43 inches
Wiring direction	Front-entry wiring

Physical data

Width	4.2 mm / 0.165 inches
Height	48.5 mm / 1.909 inches
Depth from upper-edge of DIN-rail	32.9 mm / 1.295 inches

Mechanical data

Mounting type	DIN-35 rail
Marking level	Center/side marking

Material data

Note (material data)	Information on material specifications can be found here
Color	gray
Material group	I
Insulation material	Polyamide (PA66)
Flammability class per UL94	V0
Fire load	0.105 MJ
Actuator color	orange
Weight	4.1 g

 Continued on next page

Environmental requirements

Processing temperature	-35 … +85 °C
Continuous operating temperature	-60 … +105 °C

Commercial data

eCl@ss 10.0	27-14-11-20
eCl@ss 9.0	27-14-11-20
ETIM 8.0	EC000897
ETIM 7.0	EC000897
PU (SPU)	100 pcs
Packaging type	Box
Country of origin	DE
GTIN	4055143695152
Customs tariff number	85369010000

Environmental Product Compliance

RoHS Compliance Status	Compliant,No Exemption

Approvals / Certificates

General approvals

Approval	Standard	Certificate Name
CCA DEKRA Certification B.V.	EN 60947	NTR NL 7825
CSA DEKRA Certification B.V.	C22.2	70173738
cURus Underwriters Laboratories Inc.	UL 1059	E45172
KEMA/KEUR DEKRA Certification B.V.	EN 60947	71-113099

Declarations of conformity and manufacturer's declarations

Approval	Standard	Certificate Name
ATEX-Attestation of Conformity WAGO GmbH & Co. KG	-	-
EU-Declaration of Conformity WAGO GmbH & Co. KG	-	-
UK-Declaration of Conformity WAGO GmbH & Co. KG	-	-

Approvals for marine applications

Approval	Standard	Certificate Name
ABS American Bureau of Shipping	-	19-HG1866350-PDA
BV Bureau Veritas S.A.	IEC 60947	58186/A0 BV
DNV GL Det Norske Veritas, Germanischer Lloyd	-	TAE00003JT
LR Lloyds Register	-	19/20050

Approvals for hazardous areas

Approval	Standard	Certificate Name
AEx UL International Germany GmbH c/o Physikalisch Technische Bundesanstalt	UL 60079	E185892 (AEx eb IIC resp. Ex eb IIC)
ATEX Physikalisch Technische Bundesanstalt	IEC 60079-0	PTB 18 ATEX 1004 U (II 2 G Ex eb IIC Gb bzw. I M 2 Ex eb I Mb)
CCC CNEX	GB/T 3836.3	2020312313000167 (Ex eb IIC Gb, Ex eb I Mb)
EAC Brjansker Zertifizierungsstelle	TP TC 012/2011	RU C-DE.AM02.B.00127/19 (Ex e IIC Gb U)
IECEx Physikalisch Technische Bundesanstalt	IEC 60079-0	IECEx PTB 18.0011U (Ex eb IIC Gb and Ex eb I Mb)
INMETRO TÜV Rheinland do Brasil Ltda.	IEC 60079	TÜV 19.0083 U

 Continued on next page

Downloads

Environmental Product Compliance

Compliance Search

Environmental Product Compliance 2201-1201

Documentation

Additional Information

Technical Section	pdf 2240.62 KB	

Bid Text

2201-1201	19.02.2019	xml 3.75 KB	
2201-1201	09.08.2018	docx 14.62 KB	

CAD/CAE-Data

CAD data

2D/3D Models 2201-1201

CAE data

EPLAN Data Portal 2201-1201

ZUKEN Portal 2201-1201

1 Compatible Products

1.1 Required Accessories

1.1.1 End plate

1.1.1.1 End plate

Item No.: 2002-1291
End and intermediate plate; 0.8 mm thick; gray

Item No.: 2002-1292
End and intermediate plate; 0.8 mm thick; orange

Item No.: 209-191
Separator for Ex e/Ex i applications; 3 mm thick; 120 mm wide; orange

Item No.: 209-190
Separator for Ex e/Ex i applications; 3 mm thick; 90 mm wide; orange

Item No.: 2002-1293
Seperator plate; 2 mm thick; oversized; gray

Item No.: 2002-1294
Seperator plate; 2 mm thick; oversized; orange

 Continued on next page

1.2 Optional Accessories

1.2.1 DIN-rail

1.2.1.1 Mounting accessories

Item No.: 210-196
Aluminum carrier rail; 35 x 8.2 mm; 1.6 mm thick; 2 m long; unslotted; similar to EN 60715; silver-colored

Item No.: 210-198
Copper carrier rail; 35 x 15 mm; 2.3 mm thick; 2 m long; unslotted; according to EN 60715; copper-colored

Item No.: 210-197
Steel carrier rail; 35 x 15 mm; 1.5 mm thick; 2 m long; slotted; similar to EN 60715; silver-colored

Item No.: 210-114
Steel carrier rail; 35 x 15 mm; 1.5 mm thick; 2 m long; unslotted; similar to EN 60715; silver-colored

Item No.: 210-118
Steel carrier rail; 35 x 15 mm; 2.3 mm thick; 2 m long; unslotted; according to EN 60715; silver-colored

Item No.: 210-115
Steel carrier rail; 35 x 7.5 mm; 1 mm thick; 2 m long; slotted; according to EN 60715; "Hole width 18 mm; silver-colored

Item No.: 210-112
Steel carrier rail; 35 x 7.5 mm; 1 mm thick; 2 m long; slotted; according to EN 60715; "Hole width 25 mm; silver-colored

Item No.: 210-113
Steel carrier rail; 35 x 7.5 mm; 1 mm thick; 2 m long; unslotted; according to EN 60715; silver-colored

1.2.2 Ferrule

1.2.2.1 Ferrule

Item No.: 216-241
Ferrule; Sleeve for 0.5 mm² / 20 AWG; insulated; electro-tin plated; electrolytic copper; gastight crimped; acc. to DIN 46228, Part 4/09.90; white

Item No.: 216-242
Ferrule; Sleeve for 0.75 mm² / 18 AWG; insulated; electro-tin plated; electrolytic copper; gastight crimped; acc. to DIN 46228, Part 4/09.90; gray

Item No.: 216-243
Ferrule; Sleeve for 1 mm² / AWG 18; insulated; electro-tin plated; electrolytic copper; gastight crimped; acc. to DIN 46228, Part 4/09.90; red

Item No.: 216-244
Ferrule; Sleeve for 1.5 mm² / AWG 16; insulated; electro-tin plated; electrolytic copper; gastight crimped; acc. to DIN 46228, Part 4/09.90; black

1.2.3 Installation

1.2.3.1 Cover

Item No.: 709-156
Cover; Type 3; suitable for cover carrier, type 3; 1 m long; transparent

1.2.3.2 Cover carrier

Item No.: 709-169
Cover carrier; Type 3; incl. fixing/retaining screws and knurled nut; suitable for 279 to 282 and 880 Series rail-mounted terminal blocks; suitable for 264 Series miniature rail-mounted terminal blocks; suitable for 270 Series sensor and actuator terminal blocks; gray

 Continued on next page

1.2.4 Insulation stop

1.2.4.1 Insulation stop

Item No.: 2001-171
Insulation stop; 0.25 - 0.5 mm²; 5 pieces/ strip; light gray

1.2.5 Jumper

1.2.5.1 Jumper

Item No.: 2001-406/020-000
Delta jumper; insulated; light gray

Item No.: 2001-410
Jumper; 10-way; insulated; light gray

Item No.: 2001-402
Jumper; 2-way; insulated; light gray

Item No.: 2001-403
Jumper; 3-way; insulated; light gray

Item No.: 2001-404
Jumper; 4-way; insulated; light gray

Item No.: 2001-405
Jumper; 5-way; insulated; light gray

Item No.: 2001-406
Jumper; 6-way; insulated; light gray

Item No.: 2001-407
Jumper; 7-way; insulated; light gray

Item No.: 2001-408
Jumper; 8-way; insulated; light gray

Item No.: 2001-409
Jumper; 9-way; insulated; light gray

Item No.: 2001-440
Jumper; from 1 to 10; insulated; light gray

Item No.: 2001-433
Jumper; from 1 to 3; insulated; light gray

Item No.: 2001-434
Jumper; from 1 to 4; insulated; light gray

Item No.: 2001-435
Jumper; from 1 to 5; insulated; light gray

Item No.: 2001-436
Jumper; from 1 to 6; insulated; light gray

Item No.: 2001-437
Jumper; from 1 to 7; insulated; light gray

Item No.: 2001-438
Jumper; from 1 to 8; insulated; light gray

Item No.: 2001-439
Jumper; from 1 to 9; insulated; light gray

Item No.: 2001-405/011-000
Star point jumper; 3-way; insulated; light gray

Item No.: 2006-499
Step-down jumper; from 2006/2004 to 2004/2002/2001 series; from 2206/2204 to 2204/2202/2201 series; insulated; light gray

Item No.: 210-103
Wire commoning chain; insulated; black

Item No.: 210-123
Wire commoning chain; insulated; blue

1.2.6 Marking

1.2.6.1 Marker

Item No.: 793-4501/000-006
WMB marking card; as card; stretchable 4 - 4.2 mm; plain; snap-on type; blue

Item No.: 793-4501/000-007
WMB marking card; as card; stretchable 4 - 4.2 mm; plain; snap-on type; gray

Item No.: 793-4501/000-023
WMB marking card; as card; stretchable 4 - 4.2 mm; plain; snap-on type; green

Item No.: 793-4501/000-017
WMB marking card; as card; stretchable 4 - 4.2 mm; plain; snap-on type; light green

Item No.: 793-4501/000-012
WMB marking card; as card; stretchable 4 - 4.2 mm; plain; snap-on type; orange

Item No.: 793-4501/000-005
WMB marking card; as card; stretchable 4 - 4.2 mm; plain; snap-on type; red

Item No.: 793-4501/000-024
WMB marking card; as card; stretchable 4 - 4.2 mm; plain; snap-on type; violet

Item No.: 793-4501
WMB marking card; as card; stretchable 4 - 4.2 mm; plain; snap-on type; white

Item No.: 793-4501/000-002
WMB marking card; as card; stretchable 4 - 4.2 mm; plain; snap-on type; yellow

Item No.: 2009-114/000-006
WMB-Inline; for Smart Printer; 2000 pieces on roll; stretchable 4 - 4.2 mm; plain; snap-on type; blue

Item No.: 2009-114/000-007
WMB-Inline; for Smart Printer; 2000 pieces on roll; stretchable 4 - 4.2 mm; plain; snap-on type; gray

Item No.: 2009-114/000-023
WMB-Inline; for Smart Printer; 2000 pieces on roll; stretchable 4 - 4.2 mm; plain; snap-on type; green

 Continued on next page

1.2.6.1 Marker

Item No.: 2009-114/000-012
WMB-Inline; for Smart Printer; 2000 pieces on roll; stretchable 4 - 4.2 mm; plain; snap-on type; orange

Item No.: 2009-114/000-005
WMB-Inline; for Smart Printer; 2000 pieces on roll; stretchable 4 - 4.2 mm; plain; snap-on type; red

Item No.: 2009-114/000-024
WMB-Inline; for Smart Printer; 2000 pieces on roll; stretchable 4 - 4.2 mm; plain; snap-on type; violet

Item No.: 2009-114
WMB-Inline; for Smart Printer; 2000 pieces on roll; stretchable 4 - 4.2 mm; plain; snap-on type; white

Item No.: 2009-114/000-002
WMB-Inline; for Smart Printer; 2000 pieces on roll; stretchable 4 - 4.2 mm; plain; snap-on type; yellow

1.2.6.2 Marking strip

Item No.: 2009-110
Marking strips; for Smart Printer; on reel; not stretchable; plain; snap-on type; white

1.2.7 Push-in type wire jumper

1.2.7.1 Jumper

Item No.: 2009-414
Push-in type wire jumper; 1.5 mm²; insulated; 110 mm long; black

Item No.: 2009-414/000-005
Push-in type wire jumper; 1.5 mm²; insulated; 110 mm long; black

Item No.: 2009-416
Push-in type wire jumper; 1.5 mm²; insulated; 250 mm long; black

Item No.: 2009-414/000-006
Push-in type wire jumper; insulated; 110 mm long; black

Item No.: 2009-412
Push-in type wire jumper; insulated; 60 mm long; black

1.2.8 Screwless end stop

1.2.8.1 Mounting accessories

Item No.: 249-117
Screwless end stop; 10 mm wide; for DIN-rail 35 x 15 and 35 x 7.5; gray

Item No.: 249-116
Screwless end stop; 6 mm wide; for DIN-rail 35 x 15 and 35 x 7.5; gray

1.2.9 Test and measurement

1.2.9.1 Testing accessories

Item No.: 2001-560
Modular TOPJOB®S connector; modular; for jumper contact slot; 10-pole; 1,50 mm²; gray

Item No.: 2001-511
Modular TOPJOB®S connector; modular; for jumper contact slot; 1-pole; 1,50 mm²; gray

Item No.: 2001-552
Modular TOPJOB®S connector; modular; for jumper contact slot; 2-pole; 1,50 mm²; gray

Item No.: 2001-553
Modular TOPJOB®S connector; modular; for jumper contact slot; 3-pole; 1,50 mm²; gray

Item No.: 2001-554
Modular TOPJOB®S connector; modular; for jumper contact slot; 4-pole; 1,50 mm²; gray

Item No.: 2001-555
Modular TOPJOB®S connector; modular; for jumper contact slot; 5-pole; 1,50 mm²; gray

Item No.: 2001-556
Modular TOPJOB®S connector; modular; for jumper contact slot; 6-pole; 1,50 mm²; gray

Item No.: 2001-557
Modular TOPJOB®S connector; modular; for jumper contact slot; 7-pole; 1,50 mm²; gray

 Continued on next page

1.2.9.1 Testing accessories

Item No.: 2001-558
Modular TOPJOB®S connector; modular; for jumper contact slot; 8-pole; 1,50 mm²; gray

Item No.: 2001-559
Modular TOPJOB®S connector; modular; for jumper contact slot; 9-pole; 1,50 mm²; gray

Item No.: 2001-549
Spacer module; modular; e.g., for bridging commoned terminal blocks; gray

Item No.: 2009-174
Test plug adapter; for 4 mm Ø test plugs; for testing TOPJOB®S rail-mounted terminal blocks; gray

Item No.: 210-136
Test plug; 2 mm Ø; with 500 mm cable; red

Item No.: 2009-182
Testing tap; for max. 2.5 mm²; tool-free connection for individual test wires 0.08 - 2.5 mm; gray

1.2.10 Tool

1.2.10.1 Operating tool

Item No.: 210-719
Operating tool; Blade: 2.5 x 0.4 mm; with a partially insulated shaft

Item No.: 210-648
Operating tool; Blade: 2.5 x 0.4 mm; with a partially insulated shaft; angled; short

Item No.: 210-647
Operating tool; Blade: 2.5 x 0.4 mm; with a partially insulated shaft; multicoloured

Installation Notes

Conductor termination

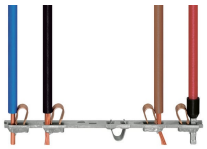

All conductor types at a glance

Push-in termination of solid and ferruled conductors

Insert fine-stranded conductors via operating tool.

Removing all conductors via operating tool.

Commoning

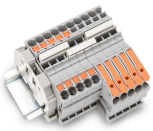

Insert a push-in type jumper bar and push down until it hits the backstop.

Commoning with step-down jumpers.

Step-down jumper (2006-499) commons 6/4 mm² (10/12 AWG) terminal blocks (2206/2204 Series) with 4/2.5/1.5 mm² (AWG 12/14/16) terminal blocks (2204/2202/2201 Series).

Testing

Testing with a 2 mm Ø test plug (max. 42 V).

 Continued on next page

Marking

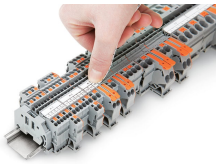

Snapping a marking strip into a marker slot.

Snapping a marking strip into the marker slot.